Paradigm™ DetectLnk™
IoT Integrated Faucet
SMARTHERM® SAFETY SHUT-OFF & ABOVE DECK MIXING, BASE MODEL



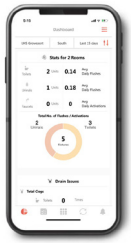

DetectLnk

Download on the App Store

GET IT ON Google Play

SCAN QR CODE

BATTERY SYSTEM:
- **Intelligent battery system** that provides low and critical levels for improved proactive maintenance.

AC TRANSFORMERS:
- **UL 1310,** Class 2 certified.
- **Can run up to 8 faucets** and/or flush valves at a time.

FEATURES:
- **Key IoT technology features:**
  - Wirelessly connect to the faucet locally with a smartphone or a tablet
  - Remote monitoring with optional wireless gateway
  - Adjust settings such as detection distance, locally or remote
  - Monitor water usage and activations down to the fixture level
  - Diagnostics such as battery life monitoring
  - Customizable alerts and notifications
  - Building Management System integration
- **Touchless operation** limits the spread of germs for a safer restroom
- **Integrated Flow Sensor:** Can measure flows of higher than 0.15 gpm (per inlet) and alerts if unexpected flow is detected
- **SmarTherm® Safety Shut-Off:** Integral thermostatic hot water temperature limiter meets ASSE 1070 without a separate thermostatic mixing valve.
- **Above-Deck Mixing:** Allows user to manually adjust temperature. Adjustable hot limit stop. Red & blue indicators.
- **Removable Mixing Handle:** Installer can set temperature and remove handle to prevent user adjustment. Cover plug included.
- **Dual Inlets:** For hot and cold water. Check valves included to prevent cross flow. Filter assemblies protect the solenoid valve from debris.
- **Clean, Integrated Design:** All electronics contained in IoT control box below deck.
- **Easy Installation & Maintenance:** Faucet installs from the top. All serviceable parts are easily accessible.
- **Self-Cleaning Solenoid Reduces Maintenance:** Integral wiper spring prevents clogging and run-on. Silicon seals.
- **Adjustable Range:** Detection zone can be easily adjusted using the DetectLnk app for smart devices.
- **Fail-Safe:** Faucet automatically shuts off upon loss of power or dead battery. No reset required.
- **Lead-Free:** Faucet contains ≤ 0.25% total lead content by weighted average.weighted average.

MODEL NUMBER:

■ BASE UNIT (Does not include power supply)

- ❑ **702B.605** Paradigm DetectLnk IoT 0.50 gpm pressure compensating, vandal-resistant, multi-laminar spray.

■ POWER KITS (Must be purchased separately)

- ❑ **PK00.WRK** Battery pack and holder
- ❑ **PK00.PAC** Plug-In AC power supply and Single AC adapter
- ❑ **PK00.HAC** Hard-Wired AC power supply and 10' extension cable
- ❑ **PK00.MAC** Multi-AC adapter and 10" extension cable
- ❑ **PK00.BBU** Allows AC powered faucets to continuously operate during a power failure. Required if using the following power kits: PK00.PAC, PK00.HAC, PK00.MAC

■ OPTIONAL 4" and 8" Deck Plates

- ❑ **702P.400** 4" metal deck plate with 1/4" fixation studs and quick spin nuts. Includes fixation screw that prevents the spout from rotating.
- ❑ **775P.800** 8" metal deck plate with 1/4" fixation studs and quick spin nuts. Includes fixation screw that prevents the spout from rotating.

■ OPTIONAL ACCESSORY

- ❑ DetectLnk wireless gateway (607B.000) is configurable for Wifi, ethernet, or celluar connection. *Subscription and data plan charges may apply. Number of gateways will depend on the application.*

DESCRIPTION:

NextGen DetectLnk IoT deck-mount electronic faucet with touchless operation. Integrated design with sensor, solenoid valve enclosed in the spout. Water pressure range from 20 - 120 psi. Includes a flow sensor per inlet and monitored by the electronics. IoT control box included and houses the electronics and battery (if applicable). Vandal-resistant single-post mounting. IoT control box cover can be secured for enhanced protection. Dual inlets for hot and cold water. Pre-installed 24" flexible inlet hose with filter assembly and 3/8" compression fitting.

RECOMMENDED SPECIFICATION:

Electronically IoT technology lavatory faucet shall feature a programmable sensor and an electronically operated self-cleaning solenoid valve with chemical resistant silicon seals. Shall feature an integrated design with all electronics enclosed in the control box. Faucet meets ASSE 1070 without a separate thermostatic mixing valve. Shall feature flow sensing capability (minimum of 0.15 gpm) for both inlets and detect unexpected flow conditions. Features an above deck mixing handle with hot limit safety stop and red / blue indicators. Shall also feature a vandal resistant metal body with single-post mounting. Shall meet ANSI A112.18.1 and ANSI 117.1 codes. Model shall be AmericanStandard # 702B.605.___.

© 2022 AS America Inc.

Paradigm™ DetectLnk™
IoT Integrated Faucet
SMARTHERM® SAFETY SHUT-OFF & ABOVE DECK MIXING, BASE MODEL

CODES AND STANDARDS

These products meet or exceed the following codes and standards:

ANSI A117.1
ASME A112.18.1/CSA B125.1
ASSE 1070/ASME A112.1070/CSA B125.70
NSF/ANSI/CAN 61: Q≤1
NSF/ANSI/CAN 372
FCC PART 15

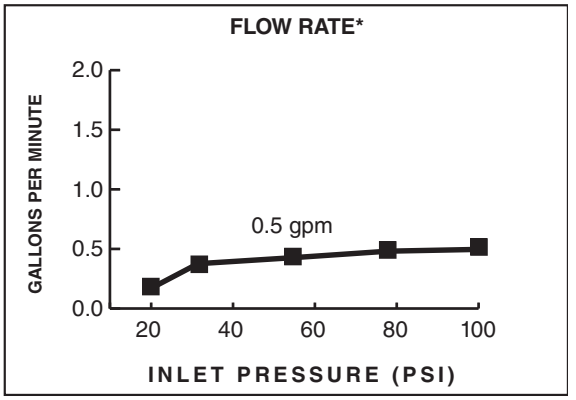

MEETS THE AMERICAN DISABILITIES ACT GUIDELINES AND **ANSI A117.1** REQUIREMENTS FOR ACCESSIBLE AND USABLE BUILDING FACILITIES-CHECK LOCAL CODES

FINISHES:	
Polished Chrome	.002

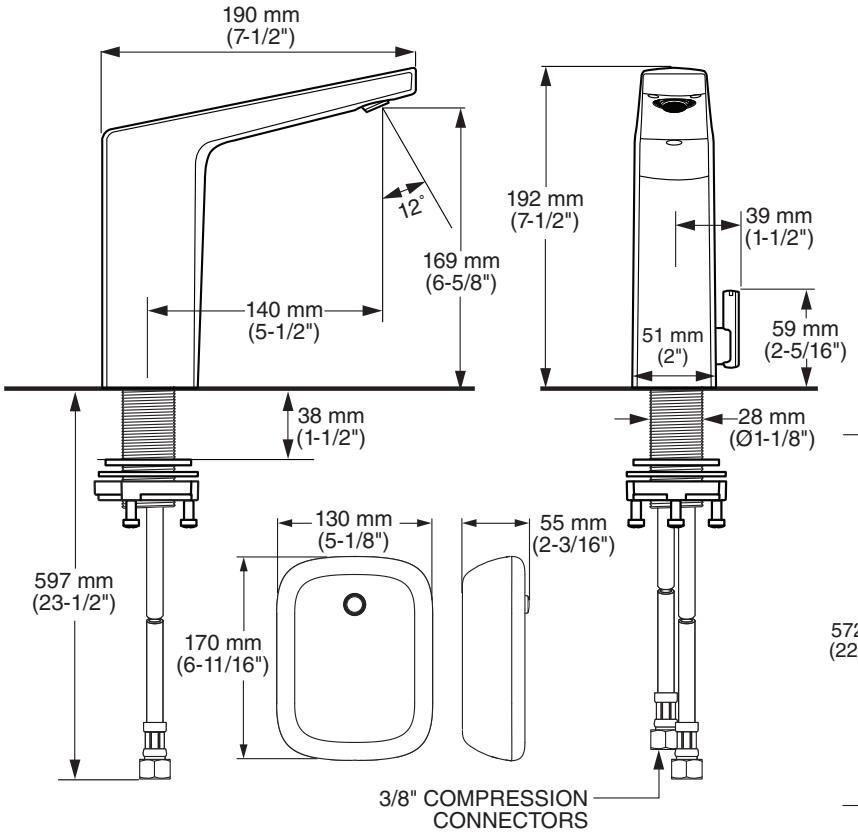

FLOW SENSOR (QTY. 2)

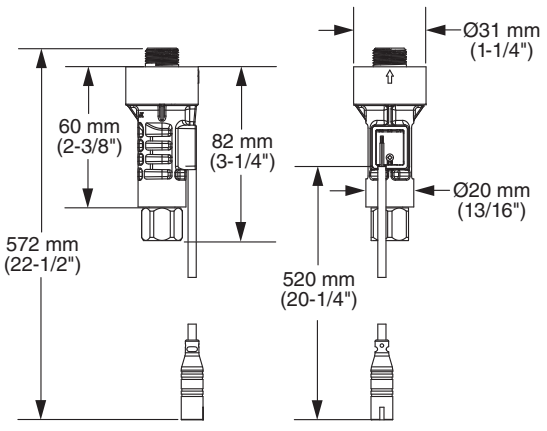

PART OF LIXIL

© 2022 AS America Inc.