VERIS

Five-Hole Bathtub Faucet with Handshower

MODEL # 19363000

Pure Freude an Wasser

GROHE

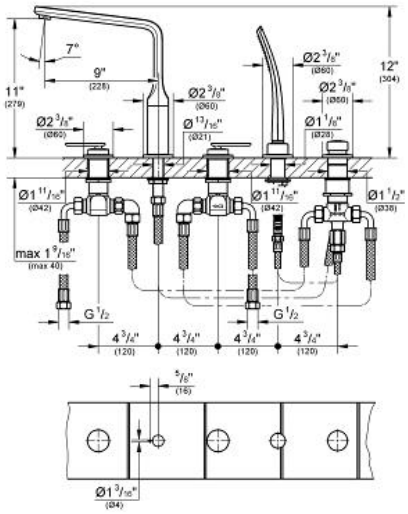

Product Description:
VERIS
Five-Hole Bathtub Faucet with Handshower

Standard Specification:
- **GROHE StarLight** chrome finish
- Consisting of:
- Mounting plate and base frame
- 1/2" (13mm) ceramic cartridge (90° turn)
- Swivel bath inlet with flow control
- Bath/shower diverter
- GROHE Ondus hand shower 27 185 000
- 79" (2000mm) metal shower hose
- Stainless steel flex lines
- Connection for shower hose
- Max Flow Rate 12.6 gpm (47.7 l/min) at 45 psi (3.1 bar)

Applicable Codes & Standards:
- Energy Policy Act of 1992
- ASME A112.18.1/CSA B125.1

Color:
❑ 19363000 StarLight Chrome