BRIDGEFORD

Three-Hole Kitchen Faucet with Side Spray

MODEL # 20130000

Pure Freude an Wasser

GROHE

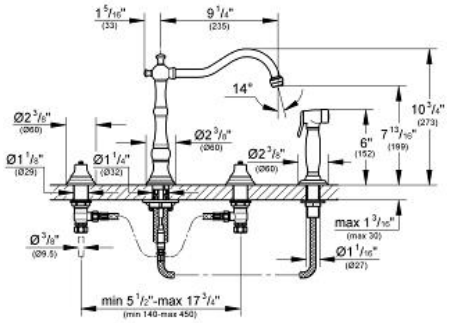

Product Description:
BRIDGEFORD
Three-Hole Kitchen Faucet with Side Spray

Standard Specification:
- Brass body spray
- 9 5/16" Spout Reach
- Handles sold separately
- Note: Handles sold separately and must be ordered; only Bridgeford Lever Handles (18 173) or Geneva Cross Handles (18 733) will fit this faucet
- **GROHE StarLight** chrome finish
- Max Flow Rate 2.2 gpm at 60 psi (8.3 L/min); 2.5 gpm at 80 psi (9.5 L/min) for hand shower

Applicable Codes & Standards:
- Energy Policy Act of 1992
- NSF 61
- ASME A112.18.1/CSA B125.1
- US Federal and State material regulations
- LOGO NSF

Color:
❑ 20130000 StarLight Chrome