GRANDERA

8" Widespread Two-Handle Bathroom Faucet M-Size

MODEL # 20416000

Pure Freude an Wasser

GROHE

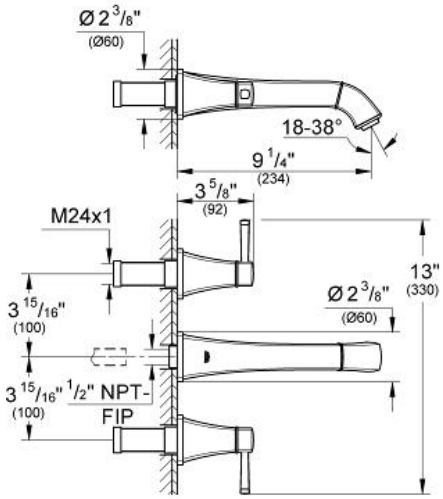

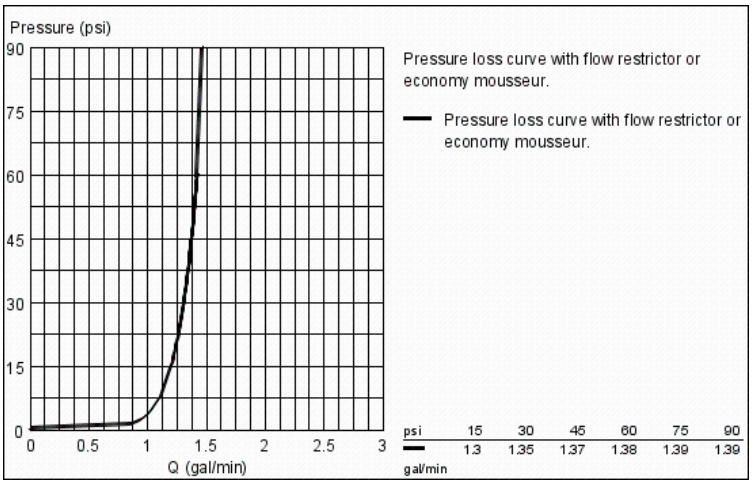

Product Description:
GRANDERA
8" Widespread Two-Handle Bathroom Faucet M-Size

Standard Specification:
- Wall mount
- Final installation set for:
- 29 031 000
- Valves hot/cold with 1/2" (13mm) cartridge (90°)
- **GROHE StarLight** chrome finish
- **GROHE EcoJoy** technology for less water and perfect flow
- **GROHE AquaGuide** adjustable aerator 5.7 l/min
- 9 1/4" spout reach
- Max Flow Rate: 1.5 gpm (5.7 L/min)

Applicable Codes & Standards:
- Energy Policy Act of 1992
- ASME A112.18.1/CSA B125.1
- ICC/ANSI A117.1

Color:
❑ 20416000 StarLight Chrome