SOMERSET
Four-Hole Roman Bathtub Faucet with Handshower

MODEL # 25077000

Pure Freude an Wasser

GROHE

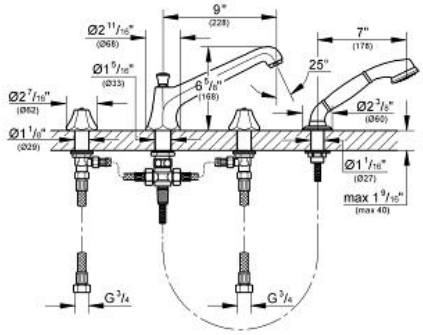

Product Description:
SOMERSET
Four-Hole Roman Bathtub Faucet with Handshower

Standard Specification:
- **GROHE StarLight** chrome finish
- Side valves with 1/2" ceramic cartridges
- Diverter bath spout with flow control
- Handshower
- Less handles – order (18 172) (sold separately)
- Max Flow Rate 13.2 gpm (50 L/min)

Applicable Codes & Standards:
- Energy Policy Act of 1992
- ASME A112.18.1/CSA B125.1

Color:
❑ 25077000 StarLight Chrome

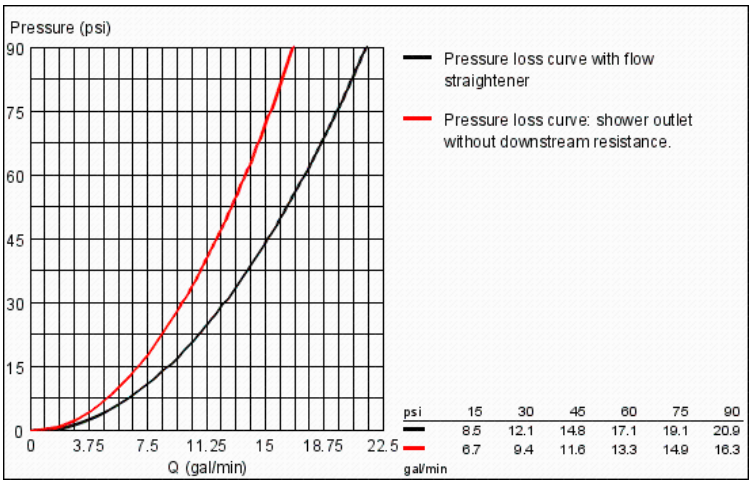

psi	15	30	45	60	75	90
	8.5	12.1	14.8	17.1	19.1	20.9
	6.7	9.4	11.6	13.3	14.9	16.3

gal/min