SEABURY
Four-Hole Roman Bathtub Faucet with Handshower

MODEL # 25502000

Pure Freude an Wasser

GROHE

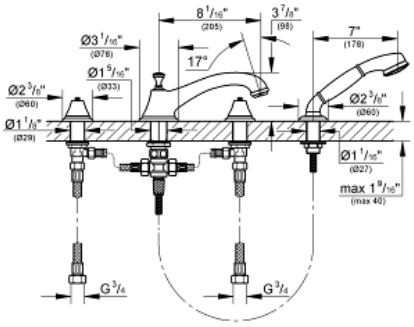

Product Description:
SEABURY
Four-Hole Roman Bathtub Faucet with Handshower

Standard Specification:
- Handles sold separately
- 1/2" valves
- Seabury hand shower
- **GROHE StarLight** chrome finish
- Max Flow Rate 2.5 gpm at 80 psi (9.5 L/min), 13 gpm at 45 psi (49.2 L/min) for Tub Filler

Applicable Codes & Standards:
- Energy Policy Act of 1992
- ASME A112.18.1/CSA B125.1
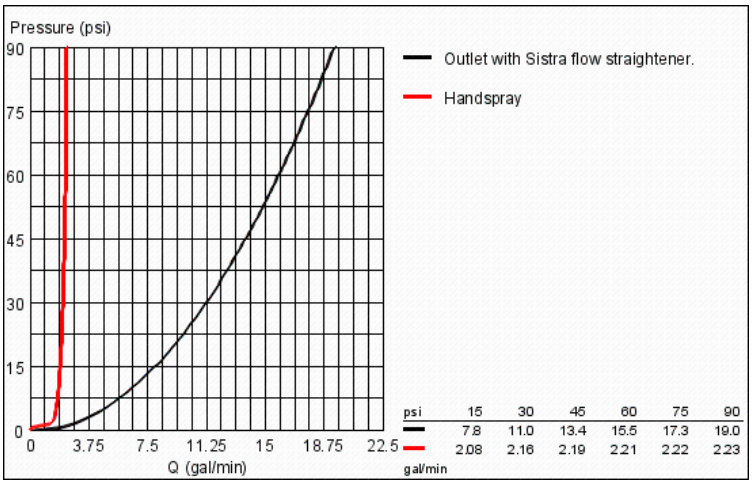
Color:
❑ 25502000 StarLight Chrome