TALIA
# 4" Centerset Bathroom Faucet
MODEL # 33121000

Pure Freude an Wasser

GROHE

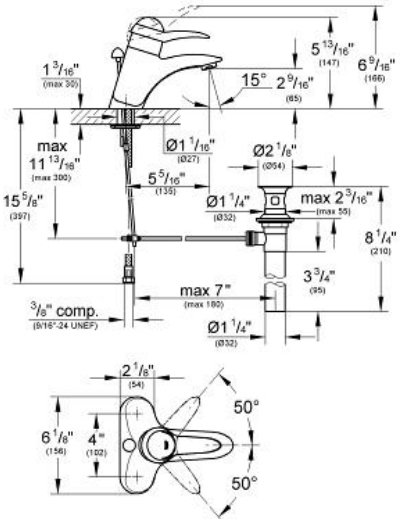


COMPLIES WITH LEAD PLUMBING LAWS

**Product Description:**
**TALIA**
**4" Centerset Bathroom Faucet**

**Standard Specification:**
- **GROHE SilkMove** ceramic cartridge
- Optional temperature limiter ref. no. 46 308
- **GROHE StarLight** chrome finish
- **GROHE WaterCare**
- Max Flow Rate 2.5 gpm at 80 psi (9.5 L/min)

**Applicable Codes & Standards:**
- Energy Policy Act of 1992
- ASME A112.18.1/CSA B125.1
- US Federal and State material regulations

**Color:**
❑ 33121000 StarLight Chrome